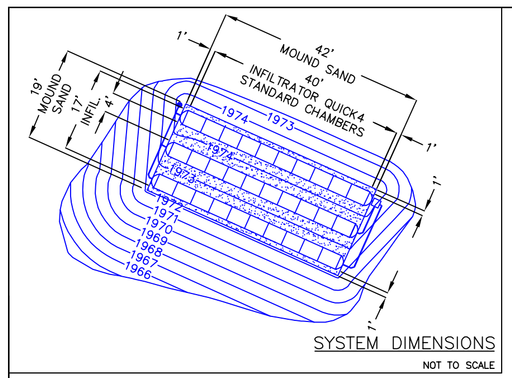

SYSTEM DIMENSIONS

NOT TO SCALE

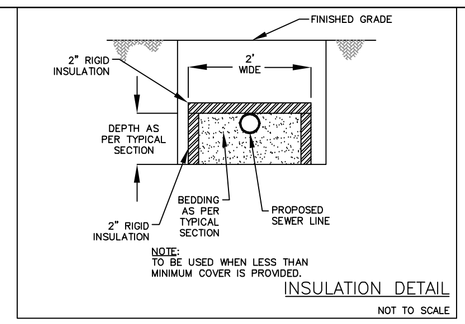

INSULATION DETAIL

NOT TO SCALE

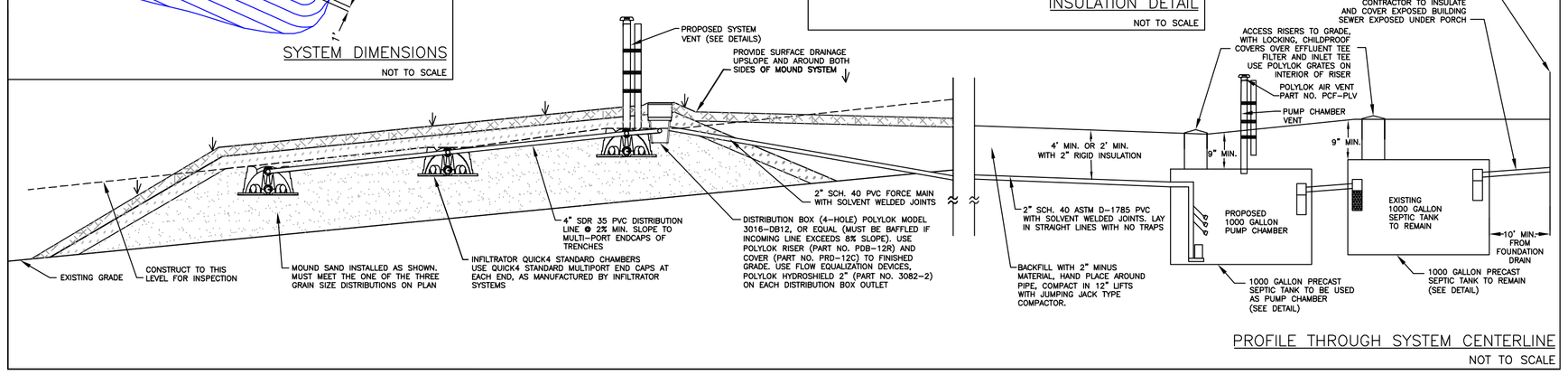

PROFILE THROUGH SYSTEM CENTERLINE

NOT TO SCALE

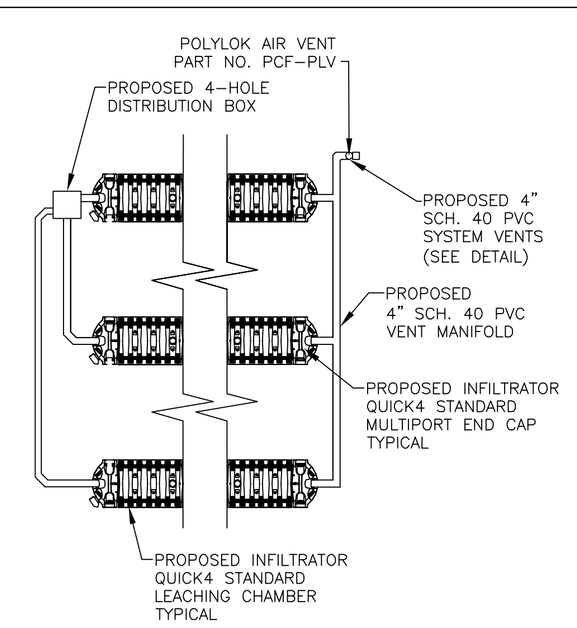

DISTRIBUTION PIPING & VENT MANIFOLD DETAIL

NOT TO SCALE

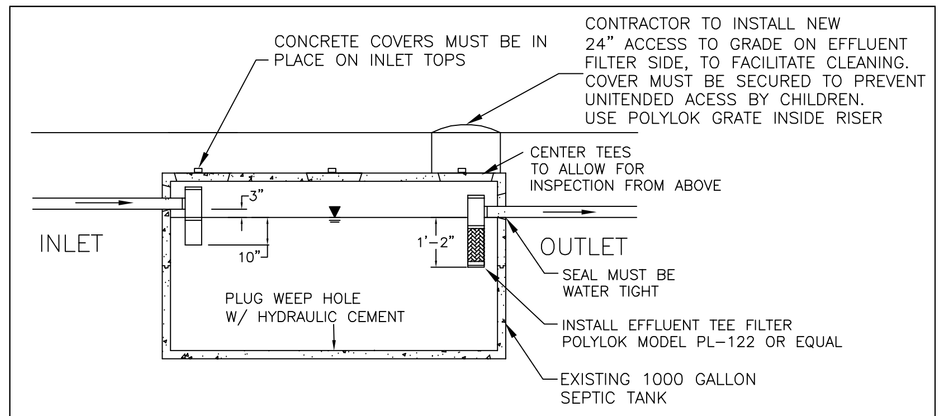

EXISTING 1000 GALLON SEPTIC TANK DETAIL

NOT TO SCALE

NOTES

1) USE EXISTING 1000 GALLON PRECAST SEPTIC TANK.
2) TANK TO BE SET LEVEL WITH INLET AND OUTLET PENETRATION AS SHOWN.
3) INLET TO USE 4 x 4 x 4 PVC TEE EXTENDING 10" BELOW OUTLET AS SHOWN.
4) OUTLET TO USE 4 x 4 x 4 PVC TEE EXTENDING 14" BELOW OUTLET AS SHOWN.
5) PROVIDE CENTER ACCESS WITHIN 6" OF SURFACE, WITH STEEL PLATE FOR MAGNETIC LOCATOR.
6) ALL PENETRATIONS TO BE SEALED TO ENSURE TANK IS WATERTIGHT.
7) BACKFILL IN 12" LIFTS, WITH COMPACTION USING 4" MINUS MATERIAL.
8) RISERS TO BE HDPE/PLASTIC.

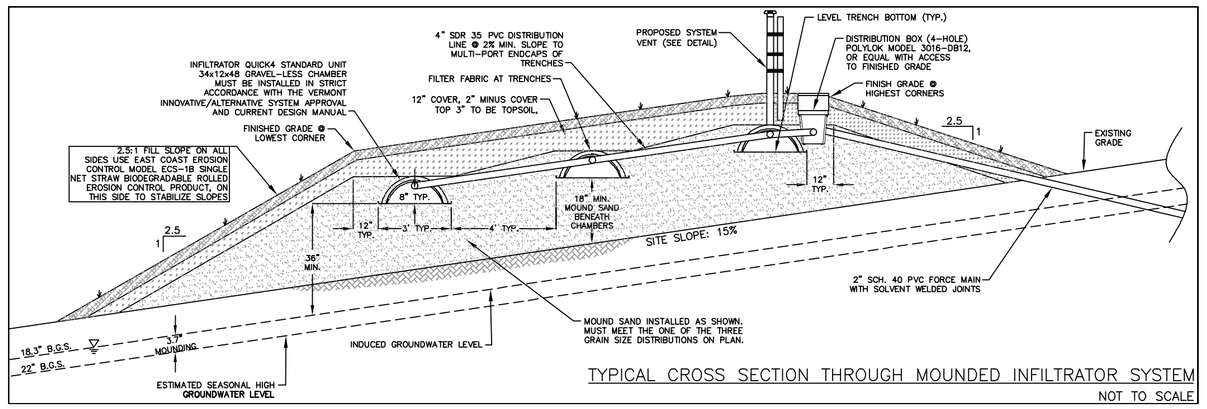

TYPICAL CROSS SECTION THROUGH MOUNDED INFILTRATOR SYSTEM

NOT TO SCALE

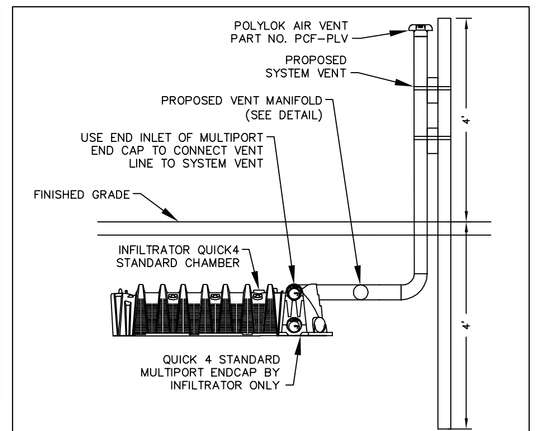

VENT PIPE DETAIL

NOT TO SCALE

NOTES:

1) USE POLYLOK AIR VENT PART NO. PCF-PLV AT TOP.
2) USE A 45 ELBOW AT EACH END PLATE, TO CONNECT TO VENT HEADER.
3) USE 4x4x8' P.T. POST WITH STAINLESS STREAL STRAPS TO ATTACH POST TO VENT.
4) IF POSSIBLE USE SDR 35 SOLID WITH STREET ELBOWS, OR 4" SCH 40 PVC.
5) ALL PIPING MUST BE THE SAME COLOR.

SYSTEM VENT DETAIL

NOT TO SCALE

DESIGN LIMITATIONS AND OPERATIONAL NOTES:

1) SYSTEM IS NOT DESIGNED TO SUPPORT A GARBAGE DISPOSAL AND NONE SHALL BE INSTALLED.
2) SYSTEM IS NOT DESIGNED TO HANDLE BACKWASH FROM A WATER TREATMENT DEVICE AND SHALL NOT BE CONNECTED INTO WASTEWATER DISPOSAL SYSTEM.
3) PERIMETER DRAINAGE OR SUMP PUMPS FROM EXISTING RESIDENCE SHALL NOT BE CONNECTED INTO WASTEWATER DISPOSAL SYSTEM AND MUST NOT INFILTRATE OR DISCHARGE WITHIN 50' OF MOUND SYSTEM.
4) THIS DESIGN IS INTENDED TO TREAT NORMAL RESIDENTIAL WASTEWATER. IT IS NOT DESIGNED TO TREAT WASTEWATER CONTAINING SALTS, SOLVENTS OR HAZARDOUS CHEMICALS. THE USE OF CHEMOTHERAPEUTIC OR HEAVY PRESCRIPTION DRUGS CAN HAVE SERIOUS DETRIMENTAL IMPACTS ON THE LIFE OF THE SYSTEM.
5) EXCESSIVE FLOWS FROM LEAKING FIXTURES, RISERS, TANKS, OR OVER OCCUPANCY INVALIDATE THIS DESIGN.
6) NO PRIVATE WATER SUPPLY WELL OR SUCTION LINE SHALL BE LOCATED WITHIN 50 FEET OF THE SEPTIC TANK OR WITHIN 100 FEET OF THE WASTEWATER DISPOSAL SYSTEM.
7) FINISHED GRADE ABOVE THE LEACHING AREA SHALL HAVE A MINIMUM SLOPE OF 2% AND ALL SITE GRADING IS TO BE DONE IN A MANNER THAT PREVENTS THE COLLECTION OF SURFACE WATER.
8) EFFLUENT FILTER TO BE INSTALLED IN SEPTIC TANK OUTLET TEE, WHICH MUST REMAIN IN PLACE AND BE MAINTAINED AS REQUIRED TO MAINTAIN FLOW AND VENTING.
9) EFFLUENT FILTER TO BE MAINTAINED AS PER MANUFACTURER SPECIFICATIONS. THE FILTER WILL CLOG IF NOT PERIODICALLY CLEANED.

INVERT AND SURFACE ELEVATIONS:

FOUNDATION WALL	EXISTING	USE 1/4"/FT MIN.
SEPTIC TANK INLET	EXISTING	
SEPTIC TANK OUTLET	EXISTING	
PUMP CHAMBER INLET	COORDINATE WITH OUTLET	
PUMP CHAMBER OUTLET	OF EXISTING SEPTIC TANK	
DISTRIBUTION BOX INLET	1980.78	
DISTRIBUTION BOX OUTLET	1980.68	
INVERT OF MANIFOLD 4" INLET TO MULTIPORT ENDCAP AT UPPER TRENCH	1980.48	
INVERT OF MANIFOLD 4" INLET TO MULTIPORT ENDCAP AT SECOND TRENCH	1979.50	
INVERT OF MANIFOLD 4" INLET TO MULTIPORT ENDCAP AT LOWER TRENCH	1978.52	
ELEV. OF HIGHEST TRENCH BOTTOM	1972.48	
ELEV. OF SECOND TRENCH BOTTOM	1971.50	
ELEV. OF LOWEST TRENCH BOTTOM	1970.52	
FINISHED GRADE @ HIGHEST CORNERS	1974.83	
FINISHED GRADE @ LOWEST CORNERS	1972.17	

NOTE:

1) CONTRACTOR TO VERIFY ELEVATIONS PRIOR TO CONSTRUCTION.

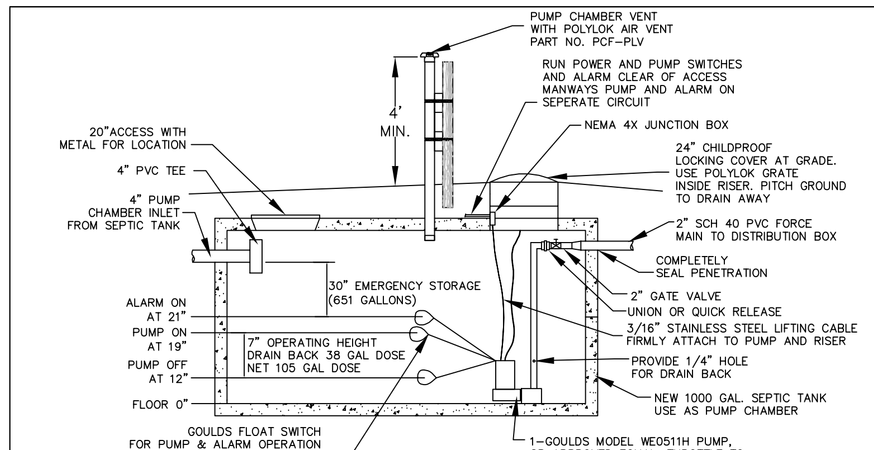

SINGLE PUMP CHAMBER DETAILS

NOT TO SCALE

NOTES:

1) PUMP CHAMBER TO BE A 1000 GALLON PRECAST SEPTIC TANK, BY WASHBURN VAULT OR EQUAL. NO WEEP HOLE ALLOWED IN TANK.
2) AN ALARM PANEL TO BE SUPPLIED, TO PROVIDE AUDIO AND VISUAL ALARM AT HIGH LEVEL. ALARM PANEL TO BE SJE RHOMBUS MODEL 1121I110H6A17A8A8C WITH INTEGRATED PUMP ELAPSED TIME AND CYCLE COUNTER. COORDINATE PLACEMENT WITH OWNER. PLACE IN A VISIBLE LOCATION, PANEL MUST PROVIDE A SILENCER TO SILENCE THE AUDIO ALARM, VISUAL ALARM TO REMAIN UNTIL HIGH LEVEL CONDITION IS CLEARED.
3) PROVIDE ACCESS TO SURFACE THROUGH MANWAY SHOWN, WITH POSITIVE SURFACE DRAINAGE AWAY.
4) ALL PENETRATIONS TO BE SEALED TO ENSURE TANK IS WATERTIGHT.
5) BACKFILL IN 12" LIFTS, WITH COMPACTION USING 4" MINUS MATERIAL.
6) PUMP AND FITTINGS MUST BE DIRECTLY BELOW OPENING TO ALLOW EASY ACCESS AND REMOVAL.
7) PROVIDE JUNCTION BOX FOR ALL ELECTRICAL CONNECTIONS MADE WITHIN CHAMBER.
8) FOLLOW ALL APPLICABLE PLUMBING AND ELECTRICAL CODES FOR INSTALLATION.
9) ALARM SHALL BE INSTALLED IN BASEMENT MECHANICAL ROOM.
10) ENTRY BY ANY PERSONNEL SHOULD FOLLOW CONFINED SPACE ENTRY PROCEDURES.

PUMP CHAMBER VENT NOTES:

1) USE POLYLOK AIR VENT PART NO. PCF-PLV AT TOP.
2) PROVIDE 1/4" MESH GAURD AT END.
3) USE A 45 ELBOW AT THE END OF EACH LATERAL, TO CONNECT TO VENT HEADER.
4) USE 4x4x8' P.T. POST WITH STAINLESS STEEL STRAPS TO ATTACH POST TO VENT.
5) IF POSSIBLE USE SDR 35 SOLID WITH STREET ELBOWS, OR 4" SCH 40 PVC.
6) ALL PIPING MUST BE THE SAME COLOR.

CONSTRUCTION NOTES:

1) PRIOR TO STARTING CONSTRUCTION, CONTRACTOR SHALL:
   a. ARRANGE TO HAVE A PRECONSTUCTION MEETING AND/OR CALL WITH THE ENGINEER TO REVIEW THE PROJECT.
   b. CONFIRM THAT THE CONTRACTOR IS WORKING OFF THE LATEST STATE APPROVED PLAN AND LATEST STATE PERMITS.
   c. CONFIRM THAT THE CONTRACTOR HAS REVIEWED ALL OTHER PERMITS ASSOCIATED WITH THE CONSTRUCTION.
   d. CONFIRM THAT THE CONTRACTOR HAS PERFORMED REVIEW OF THE FIELD LAYOUT OF THE LOCATIONS AND ELEVATIONS OF EXISTING AND PROPOSED COMPONENTS AND INFORM THE ENGINEER OF ANY CONFLICTS PRIOR TO CONSTRUCTION.
   e. FOR REPLACEMENT SEPTIC SYSTEMS, THAT THE CONTRACTOR HAS EXPOSED ALL CONNECTIONS TO EXISTING SEWER COMPONENTS, AND RUN WATER FROM ALL FIXTURES IN THE HOUSE TO CONFIRM THERE ARE NO OTHER EXISTING SEWER CONNECTIONS, PRIOR TO SETTING TANSK AND CONSTRUCTING THE FIELD.
   f. PROVIDE FOR ENGINEER'S APPROVAL A COPY OF THE SIEVE ANALYSIS REPRESENTING THE MOUND SAND PROPOSED FOR USE IN THE SYSTEM PRIOR TO COMMENCEMENT OF WORK FOR ENGINEER'S APPROVAL. NO SIEVE ANALYSIS OLDER THAN 1 YEAR WILL BE ACCEPTED. ENGINEER RESERVES THE RIGHT TO DO AN IN PLACE SAMPLE OF THE MOUND SAND AT THE TIME OF THE FINAL INSPECTION TO CONFIRM THE SIEVE ANALYSIS ACCEPTED BY THE ENGINEER IS REPRESENTATIVE OF THE SAND USED TO CONSTRUCT THE MOUND. IT IS THE CONTRACTORS REPSPONSIBILITY TO INSTALL SAND THAT MEETS THE PROJECT SPECIFICATIONS.
2) THE INFILTRATOR SYSTEM SHALL BE INSTALLED IN ACCORDANCE WITH THE APPROVED PLANS AND DESIGN AND INSTALLATION MANUAL FOR INFILTRATOR CHAMBERS IN VERMONT.
4) IN THE AREA OF THE WASTEWATER SYSTEM CUT ALL SITE VEGETATION FLUSH TO GROUND, PLOW AREA SHOWN TO 8" DEPTH, WITHIN LIMITS OF FILL. PLOW PARALLEL WITH CONTOURS, CASTING SOIL UPSLOPE. TILLING OF GROUND WITH BUCKET TEETH IS ACCEPTABLE, IF DONE IN THE SAME MANNER.
5) PLOWING OR CONSTRUCTION OF THE MOUND AREA MAY NOT TAKE PLACE IN HIGH MOISTURE CONTENT CONDITIONS.
6) NO EQUIPMENT SHALL TRACK ON PLOWED SURFACE UNTIL 12" OF SAND FILL HAS BEEN PLACED OVER PLOWED SURFACE.
7) ALL TREES WITHIN 10' OF TOE OF FILL MUST BE CUTOFF AT THE BASE EXCEPT WHERE NOTED, EXERCISE CARE TO MINIMIZE DISTURBANCE OF THE SOIL LAYERS.
8) MOUND SAND FILL MUST MEET MEET ANY OF THE THREE VT MOUND SAND SPECS SHOWN ON PLAN.
9) FROM HOUSE TO SEPTIC TANK USE 4" EXISTING BUILDING SEWER, FROM SEPTIC TANK TO PUMP CHAMBER USE 4" SCH. 40 PVC, FROM PUMP CHAMBER TO TO DISTRIBUTION BOX USE 2" SCH. 40 PVC, FROM DISTRIBUTION BOX TO MULTI-PORT END CAPS AT TRENCHES USE 4" SDR 35 PVC. FOLLOW INVERT ELEVATIONS, MINIMUM AND MAXIMUM SLOPES ON PLANS, FOLLOW DETAILS FOR ALL INSTALLATIONS. PVC JOINTS TO BE SOLVENT WELDED OR GASKETED PUSH-ON TYPE.
10) INFILTRATOR TRENCH SYSTEM IS DESIGNED TO BE VENTED FROM THE FINAL VENT THROUGH THE ROOF VENT OF THE HOUSE. ALL "TRAPS" OR OBSTRUCTIONS THAT WOULD HINDER VENTING OF THE LEACHING SYSTEM MUST BE AVOIDED. TRENCHES ARE TO BE VENTED THROUGH THE INLET OF MULTI-PORT END CAP AS SHOWN IN DETAIL USING 4" SCH. 40 PVC.
11) COVER OVER RAISED SYSTEM LINE TO BE 2" MINUS MATERIAL, FREE OF ALL LARGE STONES.
12) AT LEAST 72 HOURS BEFORE PLACING SAND FILL OVER PLOWED AREA, NOTIFY ENGINEER FOR INSPECTION. AT LEAST 72 HOURS BEFORE FINAL INSPECTION OF ENTIRE SYSTEM, CONTACT ENGINEER AND SEPTIC OFFICER FOR INSPECTION. CONTRACTOR TO SUPPLY ALL WATER IF REQUIRED.
13) LOAM, SEED & MULCH ALL DISTURBED AREAS. PROVIDE EROSION CONTROL AS REQUIRED. FOLLOW EROSION CONTROL PLAN IF ONE EXISTS FOR PROJECT.
14) CERTIFICATION FORM, PROVIDED BY ENGINEER, STATING THAT SYSTEM WAS INSTALLED ACCORDING TO PLANS (AND OTHER DIRECTIVE FROM ENGINEER) WILL BE COMPLETED BY THE ENGINEER. CONSTRUCTION NOT IN ACCORDANCE WITH PLANS OR ENGINEER'S DIRECTIVES WILL NOT BE APPROVED, AND COULD RESULT IN REMOVAL AND REINSTALLATION TO MEET PROJECT PLANS AND DIRECTIVES.
15) CONTACT ENGINEER WITH ANY CONFLICTS AS SOON AS THEY ARE EVIDENT, PRIOR TO PROCEEDING WITH CONSTRUCTION. ANY CHANGES MUST BE APPROVED BY ENGINEER IN WRITING.
16) LOCATION OF DISPOSAL SYSTEM WILL BE STAKED AND LABELED IN THE FIELD. CONTRACTOR TO CONFIRM THAT THE LOCATIONS OF STAKES ARE ACCURATE AND IMMEDIATELY REPORT ANY CONFLICTS TO ENGINEER PRIOR TO COMMENCING CONSTRUCTION. NO UNNECCESSARY DISTURBANCE OR STORAGE OF MATERIALS IS ALLOWED IN THE DISPOSAL FIELD AREA. IT IS THE CONTRACTOR'S RESPONSIBILITY TO MAINTAIN THE STAKES, AND TEMPORARY BENCHMARK IN THEIR ORIGINAL POSITIONS AS STAKED OUT BY THE ENGINEER.
17) THE CONTRACTOR SHALL PROVIDE THE ENGINEER WITH A COPY OF THE SIEVE ANALYSIS REPRESENTING THE MOUND SAND PROPOSED FOR USE IN THE SYSTEM CONSTRUCTION PRIOR TO COMMENCEMENT OF WORK FOR ENGINEER'S APPROVAL.
18) OWNER AND CONTRACTOR ARE REMINDED THAT PROJECT IS NOT COMPLETE UNTIL AN INSTALLATION CERTIFICATION LETTER IS OBTAINED. TRINITY CANNOT ISSUE THE INSTALLATION CERTIFICATION LETTER UNTIL THE WASTEWATER SYSTEM AND PROPOSED WELL ARE CONSTRUCTED IN ACCORDANCE WITH THE PLAN APPROVED BY THE VT DEC.

MOUND SAND FILL MUST MEET ONE OF THESE SPECIFICATIONS

TYPE 1		TYPE 2 (ASTM C-33)		TYPE 3	
NO. 3/8	85-100%	NO. 4	95-100%	NO. 3/8	85-100%
NO. 40	25-75%	NO. 8	80-100%	NO. 40	30-50%
NO. 60	0-30%	NO. 16	50-85%	NO. 200	0-5%
NO. 100	0-10%	NO. 30	25-60%		
NO. 200	0-5%	NO. 50	10-30%		
		NO. 100	2-10%		

A SIEVE ANALYSIS OF PROPOSED SAND SOURCE MUST BE SUBMITTED PRIOR TO CONSTUCTION, FOR APPROVAL.
NO LIMESTONE BASED SAND ALLOWED.

DESIGN MEETS THE MINIMUM REQUIREMENTS OF VT DEC CHAPTER 1 RULES, NOVEMBER 6, 2023.

APPLICATION RATE BASAL AREA 0.74 GAL/SF/DAY (BASAL APPLICATION RATE)

DESIGN FLOWRATE BASED ON 3 BEDROOM AT @ 140 = 420 GAL/DAY
0 BEDROOM AT @ 70 = 0
3 TOTAL BEDROOMS TOTAL DESIGN FLOW 420 GAL/DAY

MIN. BASAL AREA REQUIRED = (420 GAL/DAY) / (0.74 GAL/SF/DAY) = 568 SF
APPROXIMATE EFFECTIVE BASAL AREA PROVIDED = 1412 SF F.S. ON AREA 2.49

SEPTIC TANK SIZE TO BE MINIMUM OF 1500 GALLONS, USE EFFLUENT TEE FILTER.
DOSE SIZE TO BE MAXIMUM OF 105 GALLONS, TO ALLOW FOR 4 DOSES/DAY.

NUMBER OF QUICK4 STANDARD CHAMBERS REQUIRED FROM THE INFILTRATOR LEACHING CHAMBER VERMONT STATE ATTACHMENT (DEC. 2021) = 30 Q4 STANDARD CHAMBERS
TOTAL NUMBER OF QUICK4 CHAMBERS PROVIDED = 30 Q4 STANDARD CHAMBERS
FACTOR OF SAFETY ON CHAMBERS = 1.00

LINEAR LOADING RATE (LLR): LLR = (h)(f)
SITE SLOPE = 14.0%
SOIL TYPE = Sandy Loam
h = 22 " (Critical Depth) - 6 " (Min. Unsaturated Soil Required) 16.0 Inches (Max. GW Mounding Allow ed)
f = 33.7 (From VTDEC Simplified Desktop Mounding Analysis)
LLR (Max.) = 44.93 gallons/day/Lineal Foot (Would produce Max. allow able GW Mounding = 16.0 ")
LLR (actual) = 10.50 gallons/day/Lineal Foot (LLR actual, Actual resulting GW Mounding = 3.7 ")

OTHER DESIGN NOTES:

1) NO GARBAGE DISPOSAL SHALL BE USED, NO WATER SOFTNER SHALL BE INSTALLED.
2) GROUNDWATER FOUND AT 22 THEREFORE PERFORMANCE BASED APPROACH IS USED.
3) SYSTEM MUST BE INSTALLED AND OPERATED IN ACCORDANCE WITH THE INFILTRATOR DESIGN AND INSTALLATION MANUAL, & THE VT STATE ATTACHMENT.
4) DESIGN IS BASED ON A MINIMUM OF 18 INCHES OF SAND UNDER ARC CHAMBERS.
5) SYSTEM IS DESIGNED TO TREAT WASTEWATER EFFLUENT FROM A RESIDENTIAL HOME, THE ADDITION OF ABUSIVE SUBSTANCES, ADDITIVES AND CONSTANT DISCHARGE OF WATER ARE DETRIMENTAL TO THE SYSTEM.

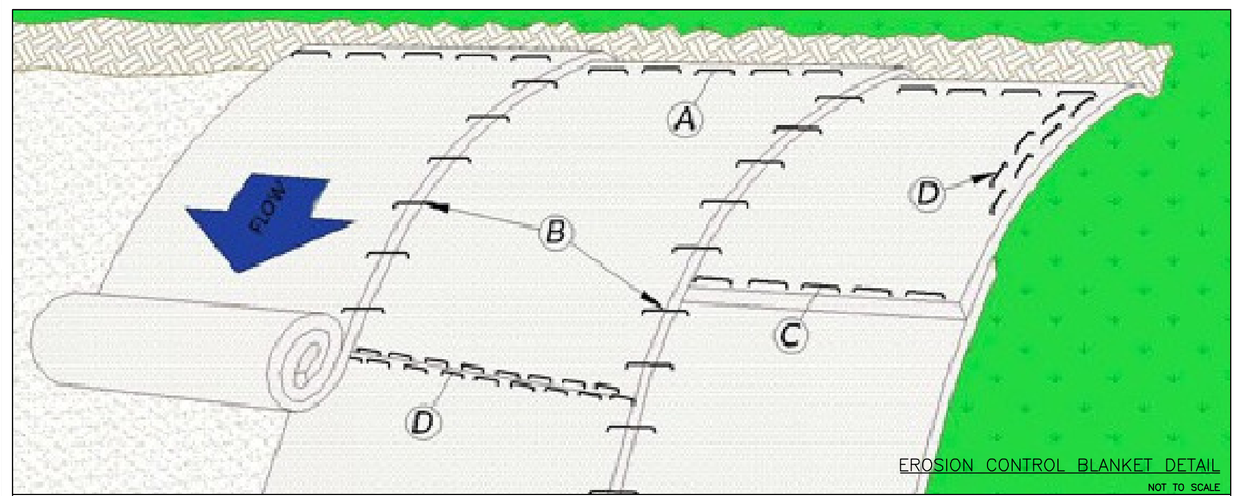

EROSION CONTROL BLANKET DETAIL

NOT TO SCALE

EROSION CONTROL BLANKET INSTALLATION INSTRUCTIONS:

THESE GUIDELINES ARE RECOMMENDATIONS ONLY. ANY QUESTIONS WITH THE INSTALLATION SHOULD BE CONFIRMED WITH YOUR LOCAL DISTRIBUTOR.

1) DIG A 6" BY 6" TRENCH BOTH UP-SLOPE AND DOWN-SLOPE OF THE AREA THE MATTING IS TO BE APPLIED. PREPARE THE SLOPE SOIL SURFACE (RAKING, SEEDING AND FERTILIZING).
2) BEGIN BY PLACING THE BLANKET A MINIMUM OF 12" DOWN-SLOPE OF THE UP-SLOPE TRENCH. SECURE THE BLANKET AT THE BOTTOM OF THE TRENCH WITH STAPLES PLACED 12" APART. BACKFILL AND COMPACT THE TRENCH. APPLY SEED, AND FOLD THE BLANKET OVER SOIL, SECURE WITH A ROW OF STAPLES PLACED 12" APART ACROSS THE WIDTH OF THE BLANKET.
3) ROLL THE BLANKET VERTICALLY DOWN THE SLOPE. SECURE USING THE APPROPRIATE STAPLE PATTERN BELOW, SPECIFIED BY THE SLOPE. (STAPLE PATTERNS)
4) PARALLEL BLANKETS MUST BE OVERLAPPED BY A MINIMUM OF 4", AND SECURED WITH A ROW OF STAPLES PLACED APPROXIMATELY 3'-0" APART.
5) ADDITIONAL VERTICAL BLANKETS CAN BE JOINED USING A MINIMUM 4" OVERLAPPING OR SHINGLE STYLE IN THE DIRECTION OF WATER FLOW. CONNECT THE BLANKETS BY PLACING STAPLES APPROXIMATELY 12" APART ACROSS THE WIDTH OF THE BLANKETS.
6) FOR MAXIMUM PERFORMANCE A CHECK SLOT SHOULD BE PLACED AT 25'-40' INTERVALS. PLACE A ROW OF STAPLES 4" APART ALONG THE ENTIRE WIDTH OF THE SLOPE. A SECOND ROW SHOULD BE PLACED 4" BELOW IN A STAGGERED PATTERN. THEN CONTINUE WITH GENERAL INSTALLATION.
7) THE END OF BLANKET MUST BE SECURED IN A 6" X 6" TRENCH WITH A ROW OF STAPLES PLACED AT 12" INTERVALS.

FINAL INSPECTION REQUIREMENTS AND PROCEDURE:

1) THE COST FOR ONE SITE VISIT TO COMPLETE THE FINAL INSPECTION HAS BEEN BILLED TO THE CLIENT. THE COST FOR PARTIAL OR INCOMPLETE FINAL INSPECTIONS MAY BE CHARGED DIRECTLY TO THE CONTRACTOR.
2) CONTRACTOR MUST BE PRESENT AT THE TIME OF INSPECTION AND MUST CONTACT THE LOCAL BOARD OF HEALTH OR SEPTIC OFFICER TO COORDINATE THEIR INSPECTION REQUIREMENTS.
3) THE ENTIRE SYSTEM MUST BE SUBSTANTIALLY CONSTRUCTED AND COMPLETELY TESTED BY THE CONTRACTOR PRIOR TO REQUESTING THE FINAL INSPECTION BY THE ENGINEER.
4) SUBSTANTIALLY CONSTRUCTED MEANS THE FOLLOWING:
   FOR ALL TYPES OF SYSTEMS:
   A. ALL COMPONENTS IN THE LEACH FIELD MUST BE INSTALLED, CONNECTED AND PROPERLY BEDDED TO THE TOP OF CHAMBERS AS SHOWN ON PROFILE.
   B. THE BUILDING SEWER MUST BE INSTALLED AND BEDDED AND AT LEAST PARTIALLY VISIBLE TO ALLOW INSPECTION OF THE CLASS OF PIPE AND BEDDING MATERIALS.
   C. THE SEPTIC TANK MUST BE INSTALLED AND BACKFILLED TO THE HEIGHT OF THE BOTTOM OF THE INLET AND OUTLET PIPES TO ALLOW INSPECTION OF THE PENETRATION SEALS. THE INLET TEE, OUTLET TEE, EFFLUENT TEE FILTER MUST BE INSTALLED. ALL RISERS MUST BE COMPLETELY INSTALLED AND AT FINISHED GRADE. ALL PENETRATIONS MUST BE SEALED.
   D. IF THE DESIGN CALLS FOR A PUMP CHAMBER, IT MUST BE INSTALLED AND BACKFILLED TO THE LEVEL OF THE BOTTOM OF THE PIPE PENETRATIONS. ALL PUMPS, PIPES, SEALS, CABLES, FLOATS, JUNCTION BOXES, ALARMS, RISERS AND COVERS MUST BE FULLY INSTALLED, AND COMPLETELY OPERATIONAL. PROVISIONS TO TEST THE PUMP SYSTEM WITH WATER WILL BE REQUIRED. CONTRACTOR MUST HAVE WATER LEVEL AT THE "PUMP OFF" LEVEL PRIOR TO INSPECTION, AND MUST HAVE SUFFICIENT WATER AVAILABLE TO TEST PUMP AS MANY TIME AS WILL BE NECESSARY.
   E. THE CONTRACTOR MUST PROVIDE TIE DISTANCES TO ALL COMPONENTS INCLUDING, BUILDING SEWERS, BENDS, TANKS, PUMP CHAMBERS, DISTRIBUTION BOXES AND FIELD CORNERS. THESE TIE DISTANCES SHOULD BE COMPLETED PRIOR TO THE FINAL INSPECTION.
   FOR RAISED PRESBY SYSTEMS:
   A. THE MOUND SAND AND SYSTEM SAND MUST BE INSTALLED IN THE MOUND, INCLUDING THE 6" DEPTH OF SYSTEM SAND OVER THE TOPS OF THE PRESBY PIPES. LEAVE ONLY THE TOP OF END CAPS AND CONNECTING PIPES VISIBLE FOR INSPECTION.
   B. ALL FILL MUST BE PLACED IN THE FILL SLOPES, INCLUDING ALL SAND, COMMON FILL AND TOPSOIL. CONTRACTOR MUST LEAVE THE TOP OF THE SYSTEM SAND UNCOVERED FOR INSPECTION. UPGRADIENT SURFACE DRAINAGE MUST BE INSTALLED.
   C. ALL VENT LINES MUST BE INSTALLED.
   D. THE CONTRACTOR MUST HAVE SIEVE ANALYSIS REPORTS FOR THE MOUND SAND AND THE SYSTEM SAND ON HAND AT THE TIME OF THE INSPECTION. THE SIEVE ANALYSIS REPORT MUST IDENTIFY THE SUPPLIER, AND THE DATE OF THE ANALYSIS.
5) ALL OTHER SITE SPECIFIC REQUIREMENTS IDENTIFIED ON THE DRAWING MUST BE COMPLETED, INCLUDING (IF APPLICABLE) ABANDONMENT OF EXISTING FAILED SYSTEMS, ABANDONMENT OF EXISTING WELLS, INSTALLATION OF CURTAIN DRAINS.
6) IF DEFICIENCIES ARE FOUND, THESE WILL BE NOTED AND THE INSPECTION WILL BE CONSIDERED A PARTIAL INSPECTION. A SUBSEQUENT INSPECTION(S) WILL BE REQUIRED TO CONFIRM THE DEFICIENCIES HAVE BEEN CORRECTED. ALL COSTS FOR SUBSEQUENT INSPECTIONS WILL BE CHARGED DIRECTLY TO THE CLIENT.

TRINITY ENGINEERING
TECHNICAL SERVICES, LLC
26 UNION STREET, SUITE 1D
NORTH ADAMS, MA 01247
(413) 398-3211 & (802) 694-1919

COPYRIGHT © TRINITY - ALL RIGHTS RESERVED.
ALL MATERIAL CONTAINED WITHIN IS PROPERTY OF TRINITY, AND NOT TO BE REPRODUCED WITHOUT WRITTEN PERMISSION

REV. NO.	DATE	DESCRIPTION	BY
2	1/9/26	ADDRESSED VTDEC COMMENTS DATED 12/3/2025